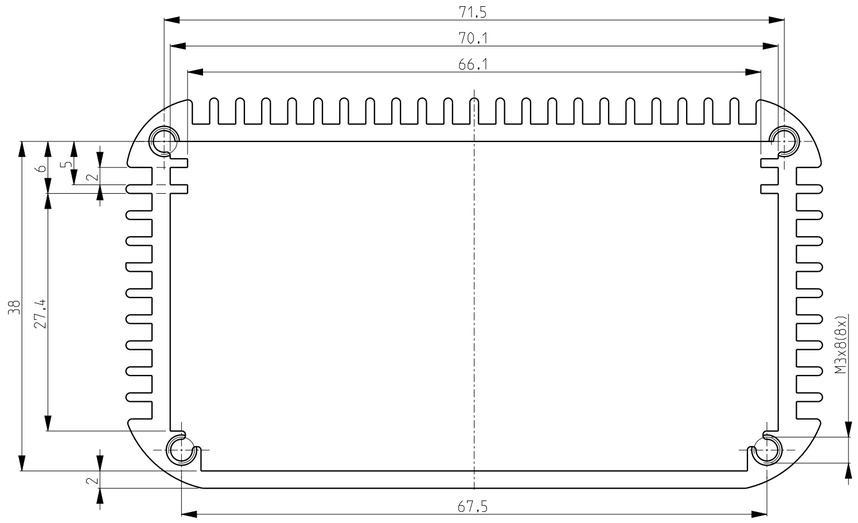

SCALE 2:1

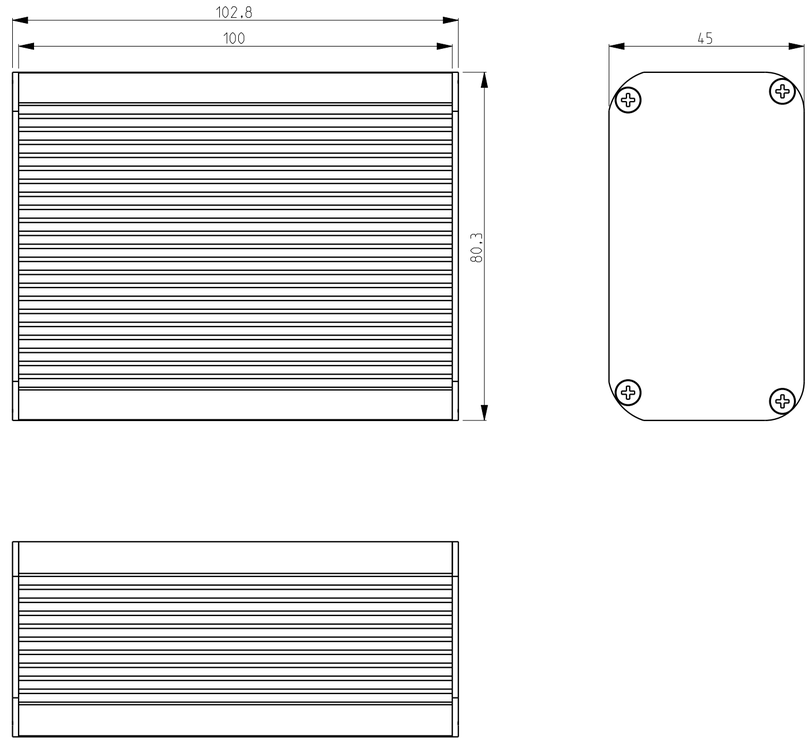

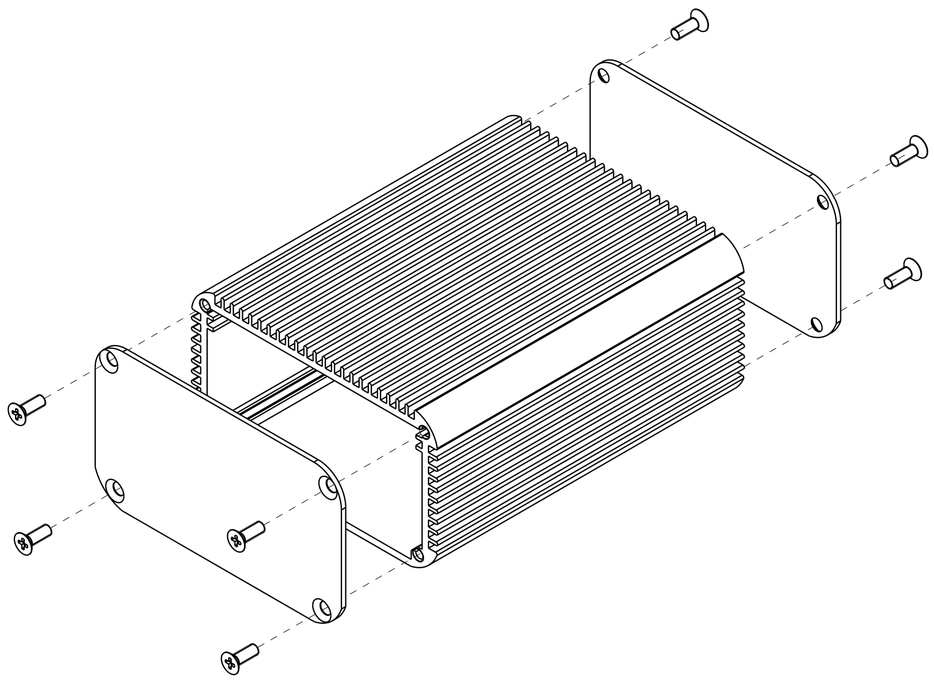

Material: aluminum
Finish: sandblasted or brushed
Coating: anodized
Color: black

INDEX	CHANGE	DESCRIPTION OF MODIFICATION	DATE	NAME
00		ARTICLE CREATION	15/05/20	NIME

ALL DIMENSIONS ARE IN MM

General Tolerances ISO2768mK

Min.	0.5	30	120	315			
Dim.	30	120	315	1000	PUNCH	BEND	MILLING
Tol.	±0.2	±0.3	±0.5	±0.8	±0.15	±0.25	±0.05

PROJECTION EURO

SCALE	MATERIAL	WEIGHT (Kg)
1 : 1		

PART NAME: J21-80W45H100L

PROJECT: ALUMINUM HOUSING SET

METRON TECHNICS

D1001457

This document is confidential and may not be made use of by or communicated to third parties without permission of METRON TECHNICS

SHEET 1 OF 1

A2